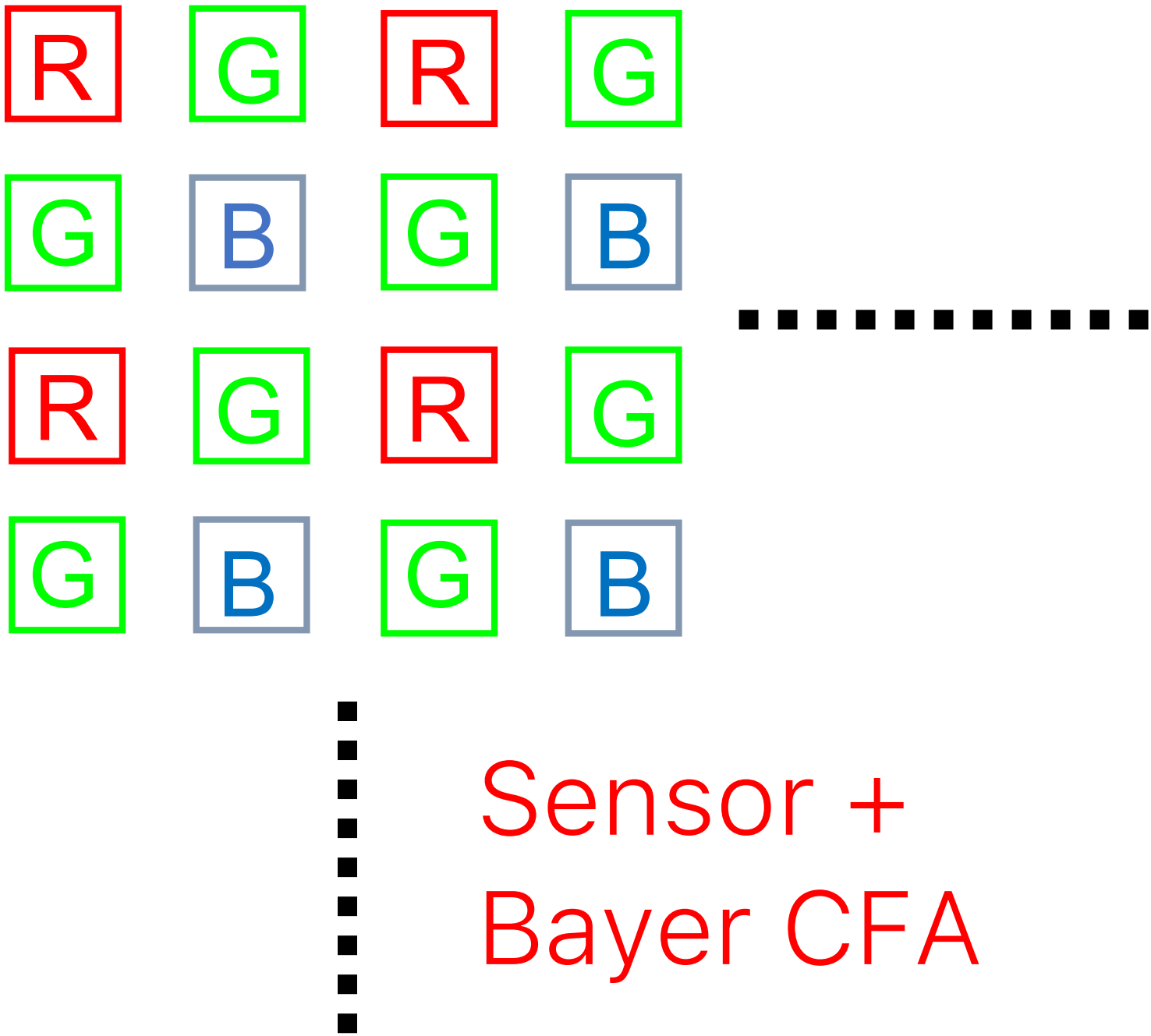
R G R G
G B G B
R G R G
G B G B
Sensor +
Bayer CFA